Water Heater (DHW) SUBMITTAL DATA SHEET

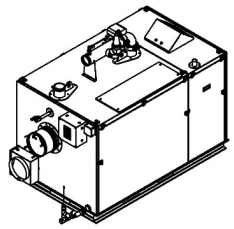

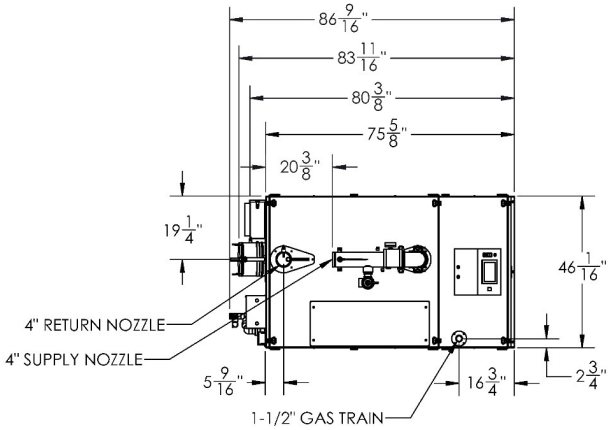

TOP VIEW

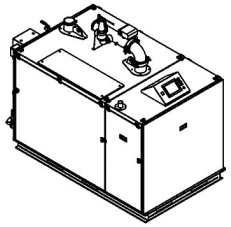

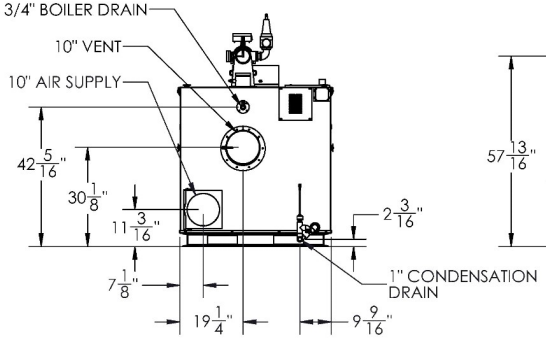

REAR VIEW

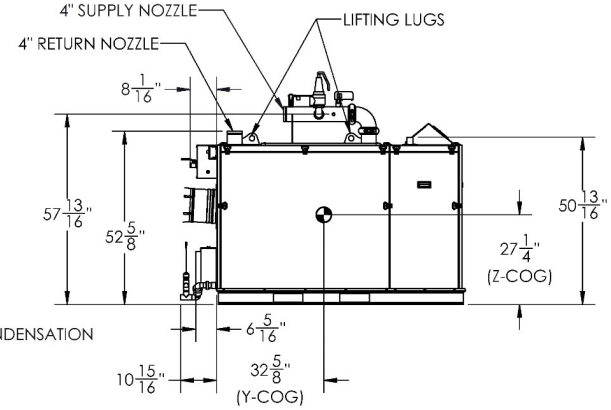

LEFT SIDE VIEW

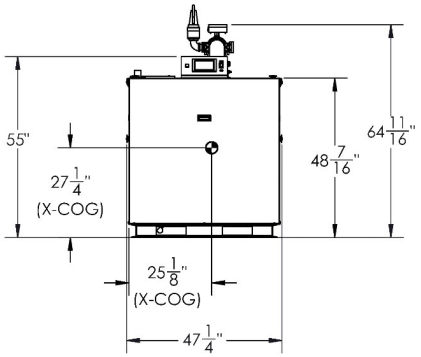

FRONT VIEW

BRYAN 783 N Chili Ave | Peru, IN 46970	BFITW-3000	**Boiler Technology Leadership Since 1916** **HOT WATER SYSTEMS** www.bryanboilers.com	Updated 12/10/2025 ABCV-251202

Water Heater (DHW) SUBMITTAL DATA SHEET

RATINGS AND CAPACITIES		
Input - Low fIre:	**600,000**	BTU/HR
Input - High Fire:	**2,500,000**	BTU/HR
Output - High Fire:	**2,910,000**	BTU/HR
Recovery Rate:	**3,564**	GPH
Thermal Efficiency %:	**97**	
Heating Surface:	**300**	Sq.Ft.
Water Vol. (gal)	**36**	Gallons
Fuel	**Natural Gas or LP**	
Firing Rate:	**Full Modulation**	
Burner Turndown:	**5:1**	
Low NOx Emissions:	**<10 ppm**	
Inlet Gas Pressure (NG):	**4" (Min.) / 14" (Max.)**	
Inlet Gas Pressure (LP):	**8" (Min.) / 14" (Max.)**	
Approx. Shipping Weight (lb)	**2,038**	lbs

ASME Section IV (Max 160 PSIG / 210°F)

Setpoint range is 60-185°F

Adjustable, manual reset high limit setting of ≤ 200°F.

ASME HLW stamp MAWT is 210°F for the vessel. (For max setpoint, see Setpoint range.)

ETL Certified to ANSI Z21.13 / CSA 4.9

ETL Certified to UL 795 / CSA 3.1

DIMENSIONS / CONNECTIONS		
Height:	**55**	(Note 1)
Width:	**46**	(Note 2)
Length:	**75-5/8**	(Note 3)
Water Outlet Pipe (FNPT):	**4**	
Water Inlet Pipe (MNPT):	**4**	
Vent Connection:	**10**	
Air Intake Connection:	**10**	
Condensate Drain (PVC):	**1**	
Drain Line Connection:	**3/4**	
Gas Inlet Connection (FPT):	**2**	

FLOWS AND PRESSURE DROPS			
Delta T	**Flow (GPM)**	**Head Loss (ft)**	**Water Hardness (GPG)***
20°	**294**	**20.3**	**12-15**
25°	**235**	**14.8**	**4-12**

Electrical Requirements: (Appliance Only)				
Model	**Voltage**	**Phase**	**Hz**	**Max. Amp Draw**
2000-2500	**120**	**1**	**60**	**13.5**
	208			**8.2**
	240			**7.7**
	208	**3**	**60**	**11**
	240			**9.9**
	480			**6.4**
3000	**208**	**1**	**60**	**14.1**
	240			**12.6**
	208	**3**	**60**	**9.9**
	480			**6.4**
3500-4000	**208**	**3**	**60**	**11**
	240			**9.9**
	480			**6.4**

NOTES:
1. Height dimension is from floor to top of jacket.
2. Length is from jacket front to jacket rear.
3. Dimensions shown are for reference only
4. Refer to manual for gas supply piping charts

Water Heater (DHW) SUBMITTAL DATA SHEET

STANDARD EQUIPMENT

PRESSURE VESSEL DESIGN

Stainless Steel Heat Exchanger

ASME Section IV Certified, "HLW" Stamp

MAWP 160 PSIG & Max Temp 210°F

- Setpoint range is 60-185°F
- Adjustable, manual reset high limit setting of ≤ 200°F.
- ASME H stamp MAWT is 210°F for the vessel. (For max setpoint, see Setpoint range.)

Ten Year Limited Pressure Vessel Warranty

COMBUSTION DESIGN

Stainless Steel Pre-Mix Burner	Zero governor gas valve
Low NOx Emissions (< 10 ppm)	Variable Speed Combustion Blower
Full Modulation, 5:1 Turndown	Air Proving Switch
Natural Gas, Propane or Dual Fuel (Gas/Gas)	Blocked Vent Switch
4" wc (8" wc Propane) to 14" wc inlet gas pressure	Manual fuel changeover switch (Dual Fuel Only)
High/Low gas pressure switches, manual reset	Direct Spark Ignition System with UV Scanner

VENTING

Category II or IV Venting

Indivdual or Common (Engineered) Vent System

Vertical or Horizontal

CPVC, PP or SS Venting *Materials Acceptable

Combustion Air Intake - Sealed or Room

APPLIANCE EQUIPMENT

Concert ™ Control (24 Vac)	Water Flow Switch
High Limit Temp Control, Manual Reset	Condensate trap
Low water cutoff, manual reset	Blocked Condensate Switch
Supply, Return & DHW Water Temperature Sensors	Pressure & Temperature Gauge
AMSE 150 PSE Relief Valve Standard	Flue Gas Temperature Sensor

ELECTRICAL DESIGN

Models 2000-2500:

- 120-208-230VAC/60HZ/1PH - High Voltage

(2000 to 2500 - Optional 208-230-460VAC/60HZ/3PH)

Models 3000:

- 208-230-240VAC/60HZ/1PH - High Voltage
- 208-230-240-460VAC/60HZ/3PH - High Voltage

Models 3500-4000:

- 208-230-240-460VAC/60HZ/3PH - High Voltage
- PCB (Printed Circuit Board) Fused Connections

24VAC/5VDC - Low Voltage PCB

- EMS Communications

(Dual RJ45 Jacks for Peer-To-Peer or ModBus)

- Boiler Options (Sensors)
- Pumps (Boiler, DHW, System) & Auxiliary Devices

* Flue system material shall be capable of continuous operation at 210°F or higher and shall be certified to UL 1738 – venting system for gas-burning appliances cat II, III and IV.

Water Heater (DHW) SUBMITTAL DATA SHEET

OPTIONAL EQUIPMENT

- ☐ External High Limit Temperature Control, Manual Reset
- ☐ Condensate Neutralizer
- ☐ Supply Header Temperature Sensor: ☐ Direct Immersion ☐ Well Immersion (with Well)
- ☐ Outdoor Air Temperature Sensor (Wired)
- ☐ EMS Signal Converter Kit (Converts Energy or Building Management System 0-10v signal to 4-20mA)
- ☐ Motorized Isolation Valves
- ☐ Alarm Buzzer with Silencing Switch
- ☐ Gas Valve Proving Switch
- ☐ Vent Adapter - CPVC
- ☐ Universal Communications Gateway (BACnet, Metasys, Modbus or Lonworks)
- ☐ Stackable Rack
- ☐ Conductor Sequencing Panel

The Conductor manages multiple condensing & non-condensing, small & large heat output, new and/or existing boilers (full modulation or on-off), and steam or hot water applications. It helps improve system efficiency by selecting and modulating the right boiler to match operating conditions. The Conductor offers a single point boiler plant Energy Management System (EMS) interface including Modbus TCP/IP, Modbus RTU RS485, BACnet/IP and BACnet MSTP standard. If Lonworks needed, add for the separate Lonworks gateway.

EXTENDED WARRANTY

☐ 3-Year Parts ☐ 5-Year Parts ☐ 10-Year Parts ☐ 5-Year Parts/Labor ☐ 10-Year Parts/Labor

Water Heater (DHW) SUBMITTAL DATA SHEET

CONCERT CONTROL FEATURES

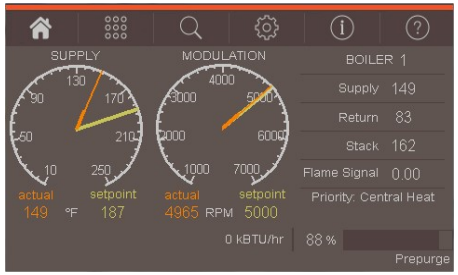

Dashboard - Color Touchscreen Display, 4"

Intuitive Icon Navigation
"Quick" Setup Menus
*Real Time BTU/H Display

Two (2) Temperature Demand Inputs

Outdoor Air Reset Curve for Each Input
Time of Day Setback Capability
(Enviracom Thermastat must be installed)

Three (3) Pump Control

Boiler Pump With On/Off or Variable Speed Control
Domestic Hot Water (DHW) Pump
System Pump
Alternative Control to Combustion
Air Damper or Standby Loss Damper
Pump Overun for Heat Dissipation
Pump Exercise
Pump Rotor Seizing Protection

Peer-to-Peer Boiler Communications

Multiple Size Boiler Sequencing Up to 8 Units
*Two (2) Boiler Start/Stop Trigger
Lead Boiler Automatic Rotation

Energy Management System (EMS) Interface

*Firing Rate and Water Temperature Based
Algorithms for Multiple Boilers; loss of EMS
signal defaults to local boiler settings
420mAdc Input/Output (010Vdc Optional Converter)
ModBus Input/Output (BACnet or LonWorks
Optional Gateway)
Simultaneous Interface with Peer-to-Peer

USB Data Port Transfer

Upload Settings Between Boilers
Download Parameters for Troubleshooting
Import Data into .CRV Formatted Files for Performance
Analysis

*** Unique to Concert**

Energy Efficiency Enhancer

AntiCycling Technology
Multipler boiler base load common rate
Outdoor Air Temperature Reset Curve
Warm Weather Shutdown
Boost Temperature & Time
Ramp Delay
OverTemperature Safeguarding

Self-Guiding Diagnostics

Identifies Fault
Describes Possible Problems
Provides Corrective Actions
Time/Date Stamp on Alarms and Lockouts

Unmatched Archives

Historical Trends Collects Up to 4 months Data
Event History Up to 3000 Alarms, Lockouts and Cycle & Run Times
Alarm Limit String Faults, Holds, Lockouts and Others
Cycle & Run Time Boilers & Pumps
Resettable (Lockouts/Alarms/Cycles & Run Time)

Domestic Hot Water Priority

DHW Tank Piped With Priority in the Boiler Loop
DHW Tank Piped as a Zone in the System With
the Pumps Controlled by the Concert Control
DHW Modulation Limiting
Status Screens
Sensor Monitoring and Control

Other Features

Factory Default Settings
Three Level Password Security
Frost Protection
Contractor Contacts (Up to 3)
Low Water Flow Safety Control & Indication
Proportional Integral Derivative (PID) Parameters for Central Heat, DHS, Sequencer and Fan

Boiler Connect Compatible *

* Models 2000-4000 require Service Tool PCB14 Kit (PN#113430-01) and one (1) Boiler Connect Bluetooth Adapter Kit (PN#113329-01) per install or cascade.

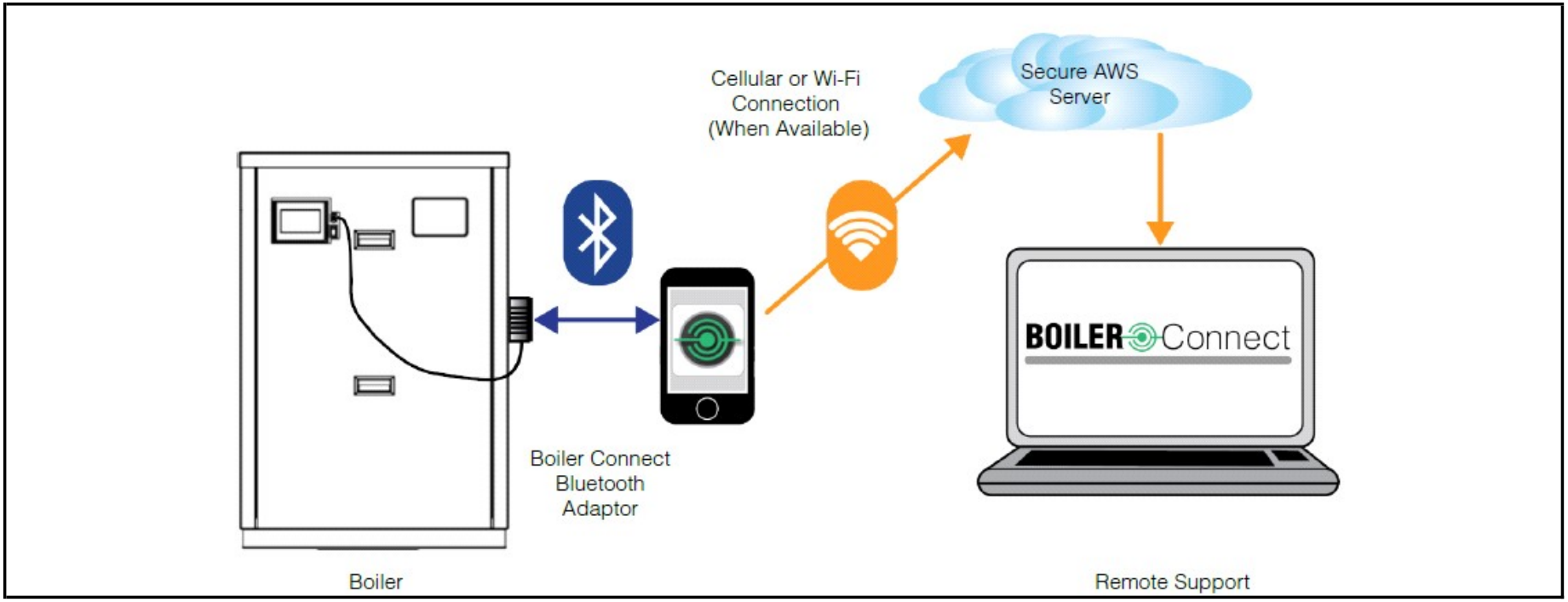

BOILER Connect

BOILER CONNECT FEATURES

Bluetooth adapter connects to the Boiler Connect App
English or Spanish language
Start-up, Troubleshooting Tips and Service Wizards
Data logs, Service and Status Reports sent to the cloud
Live Data Sharing (Cellular Service Required) with Technical Service Representative